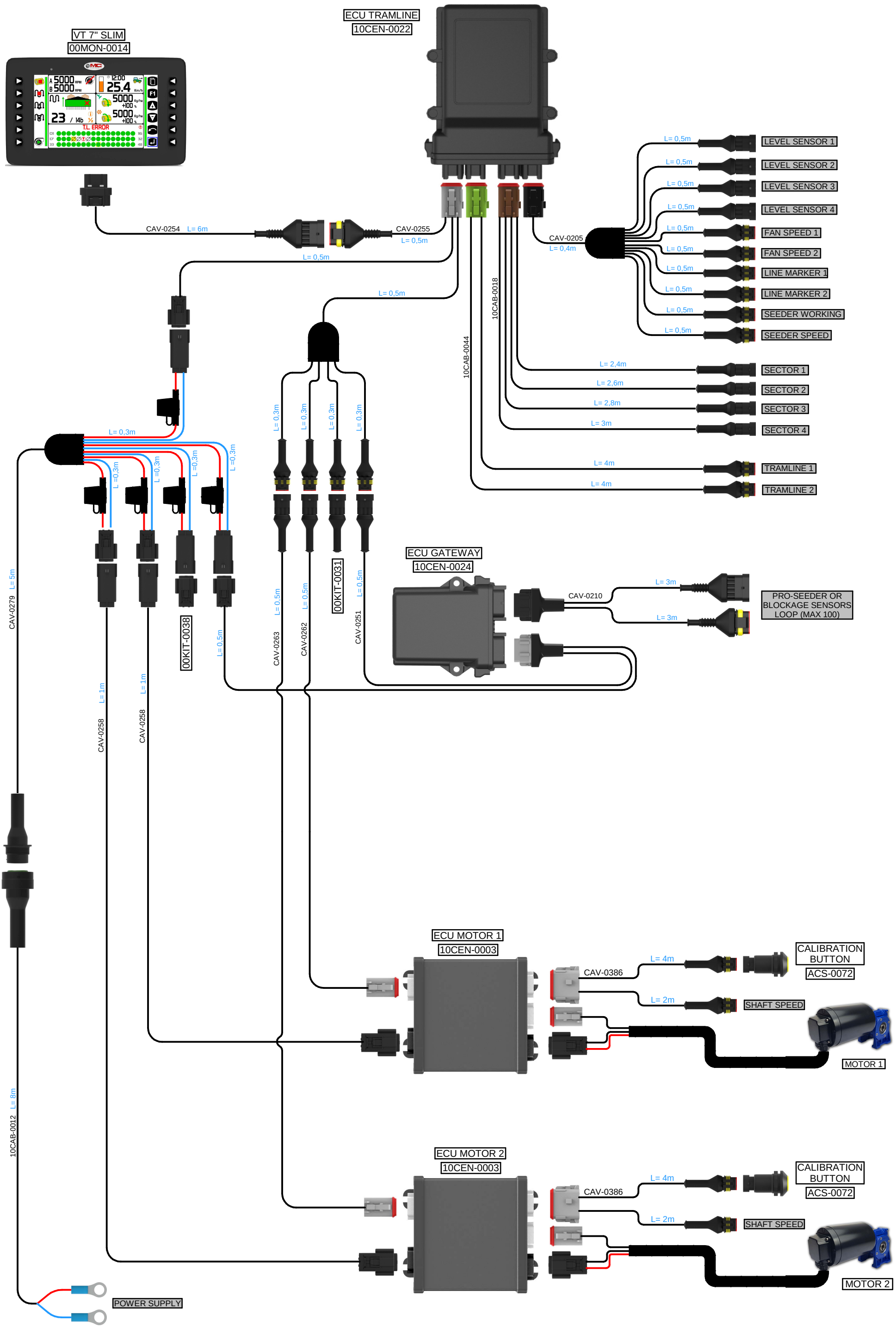MC ELECTRONICS MC ELETTRONICA Srl Via E. Fermi, 450/486 (Z.A.I.) Fiesso Umbertiano (RO)	CONNECTION DIAGRAM	CLIENT: MC		DATE: 14/09/2021
	USC PRO STANDARD SYSTEM CONFIGURATION 1 GATEWAY	N° DRW. 2008	REV 4	PAG. 1 di 1