MC ELETTRONICA Srl
Via E. Fermi, 450/486 (Z.A.I.)
Fiesso Umbertiano (RO)

CONNECTION DIAGRAM

USC PRO ISOBUS SYSTEM
CONFIGURATION 2 GATEWAY
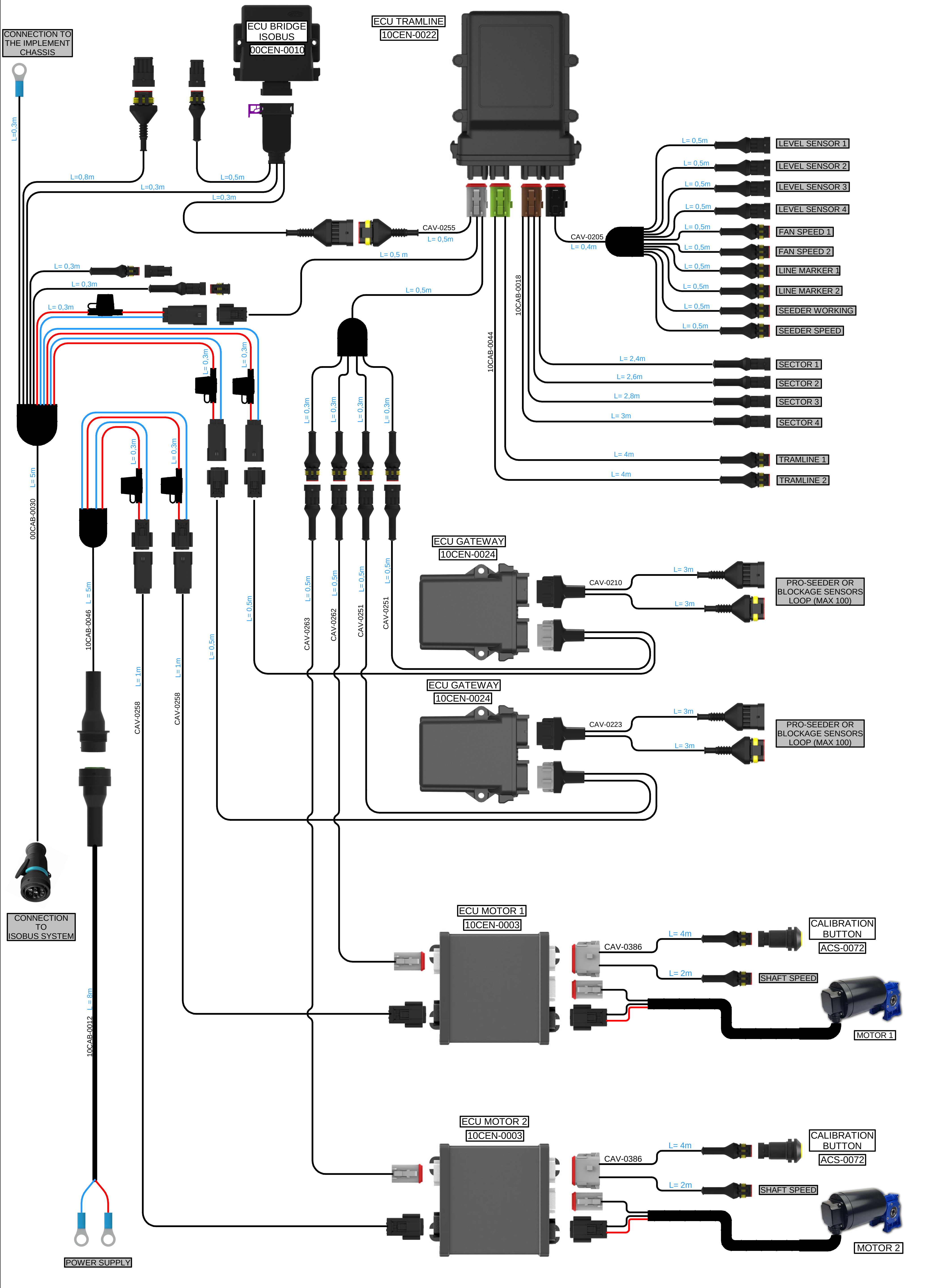
CLIENT: MC	DATE: 13/09/2021
N° DRW. 2001	REV 5
PAG. 1 di 1